LEDS C4

00-7404-05-05

V0

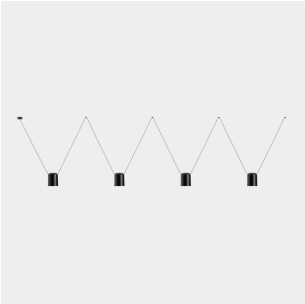

ATTIC Pendant

Designer: Nahtrang

Description

Pendant for indoor and outdoor use.

For downlighting. Design by Nahtrang. Ideal deco-tech compositions. Timeless design. Highly versatile, multiple installations. Highly customisable: accessories, finishes… No visible screws. Optimum price-performance. Easy instalation. High durability for intensive use. Structure material: Aluminium. Structure finish: Matt black. Warranty: 5 Years.

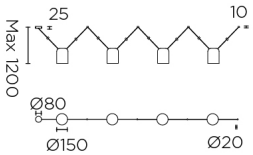

Finish
Matt black

Material
Aluminium

IP20

TECHNICAL CHARACTERISTICS

Light source
Lampholder: 4 x E27
Output (W): MAX 23W
Total power consumption (W): 92 W
Lamp maximum dimension: 120/100 mm
Quantity: 4

GEAR
Brand: NA
Power Factor: 1.00

Luminaire
Recessed: No
Warranty: 5 Years

Logistics
Energy Efficiency: NO BULB
EAN Code: 8435526891573
Net Weight (Kg): 0.000

The photograph may not match the reference exactly. Please read the product description to identify the finish.

LEDS C4

ATTIC/00-7404

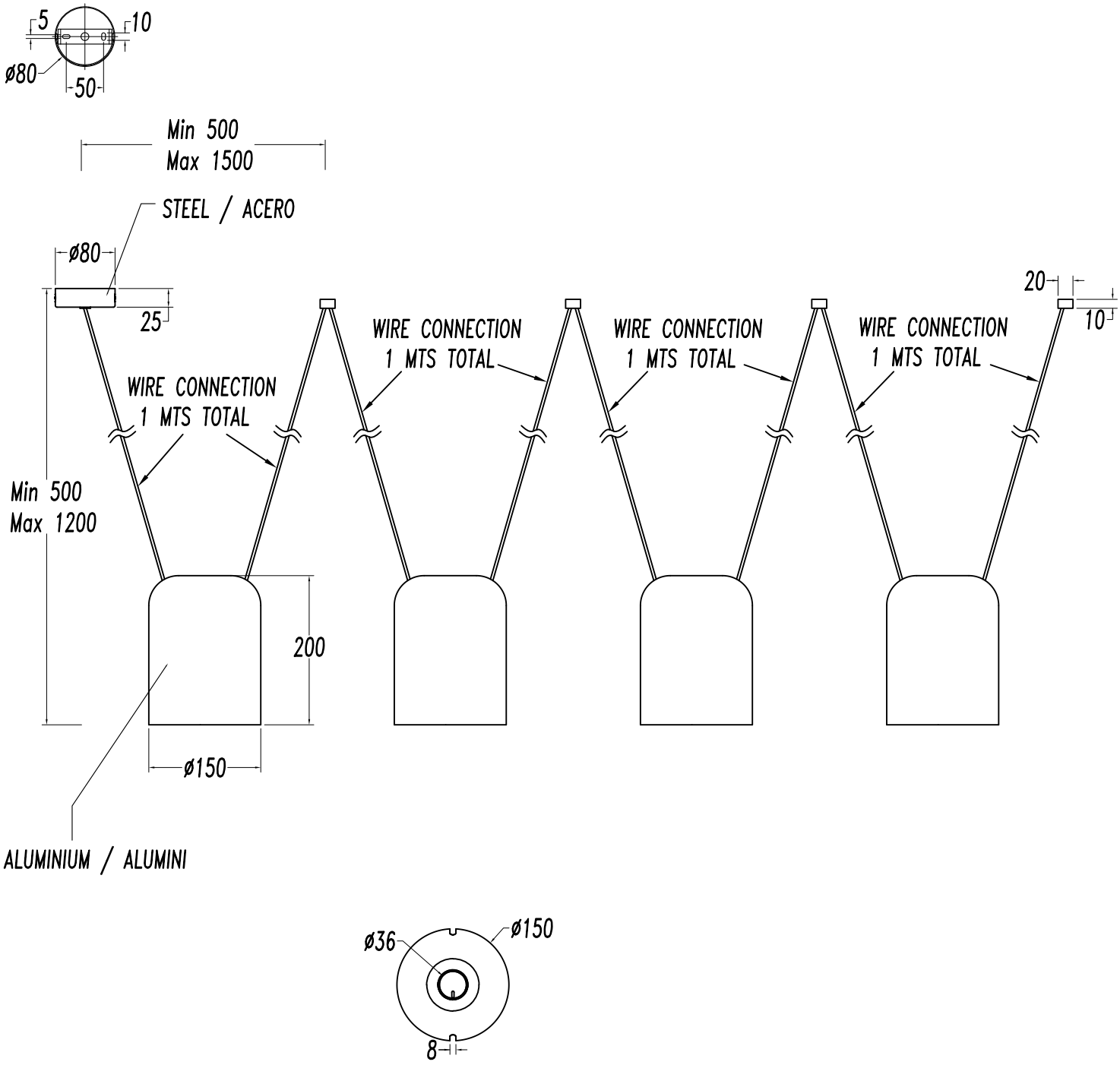

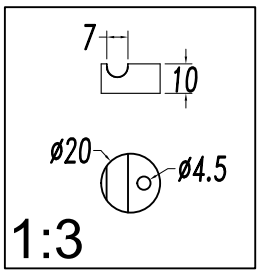

Oct-15-2018

LEDS C4

ATTIC / 00-7396; 7397; 7400; 7401; 7404; 7405

1

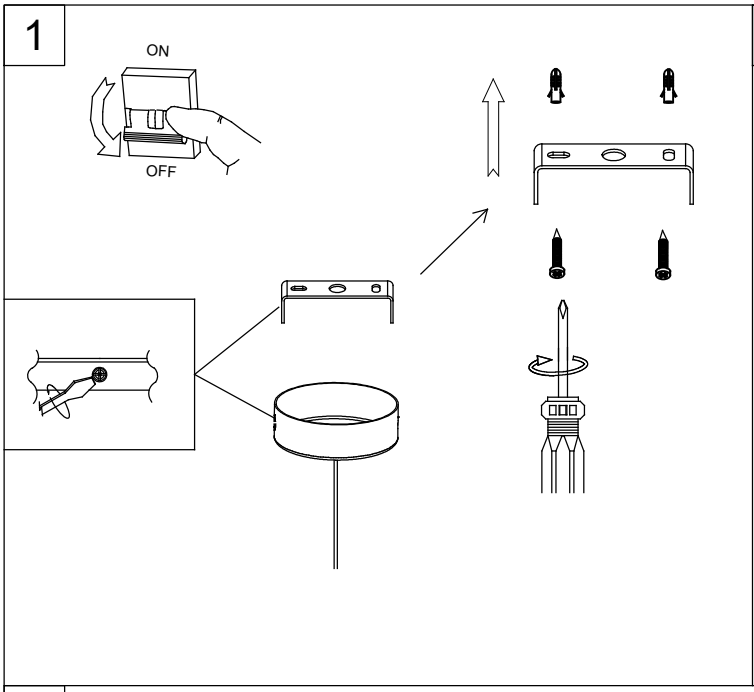

2

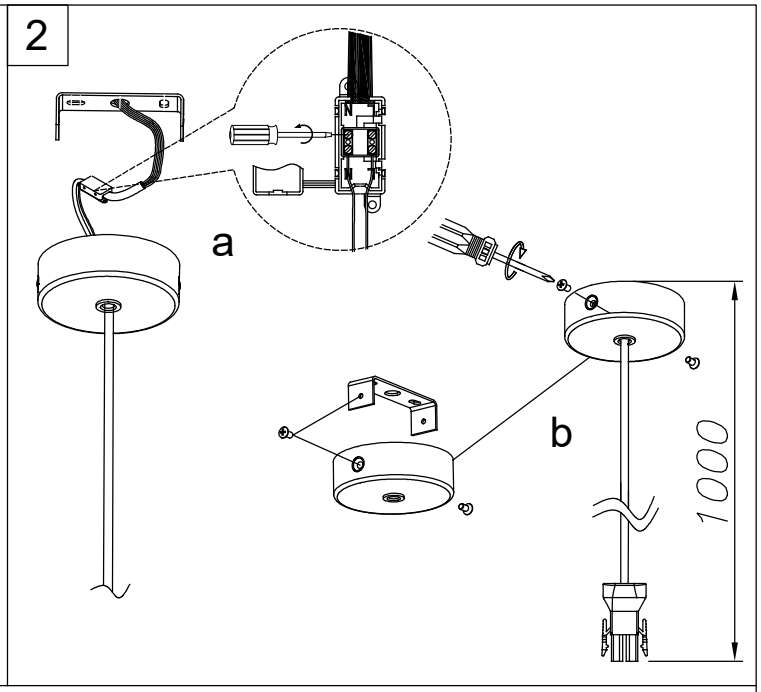

3

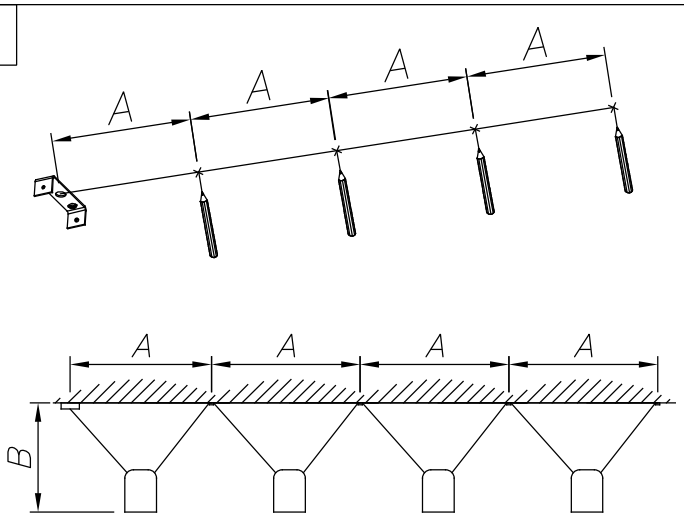

A	500mm	1000mm	1500mm
B	1140mm	1040mm	830mm

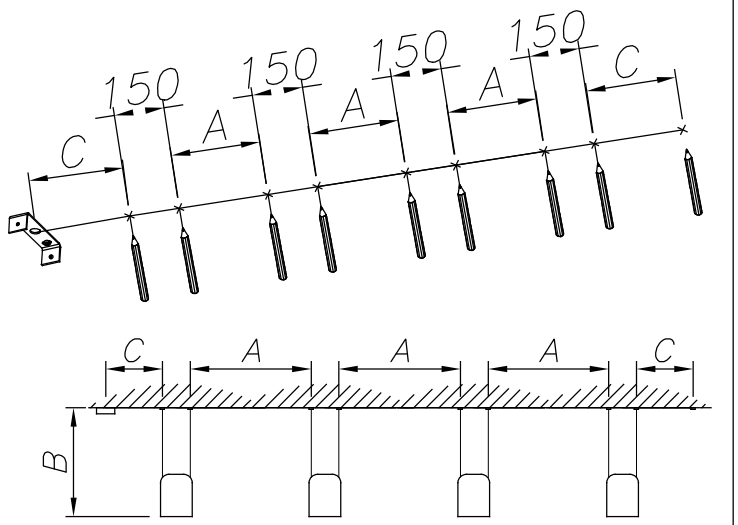

A	500mm	1000mm	1500mm
B	930mm	680mm	430mm
C	250mm	500mm	750mm

4

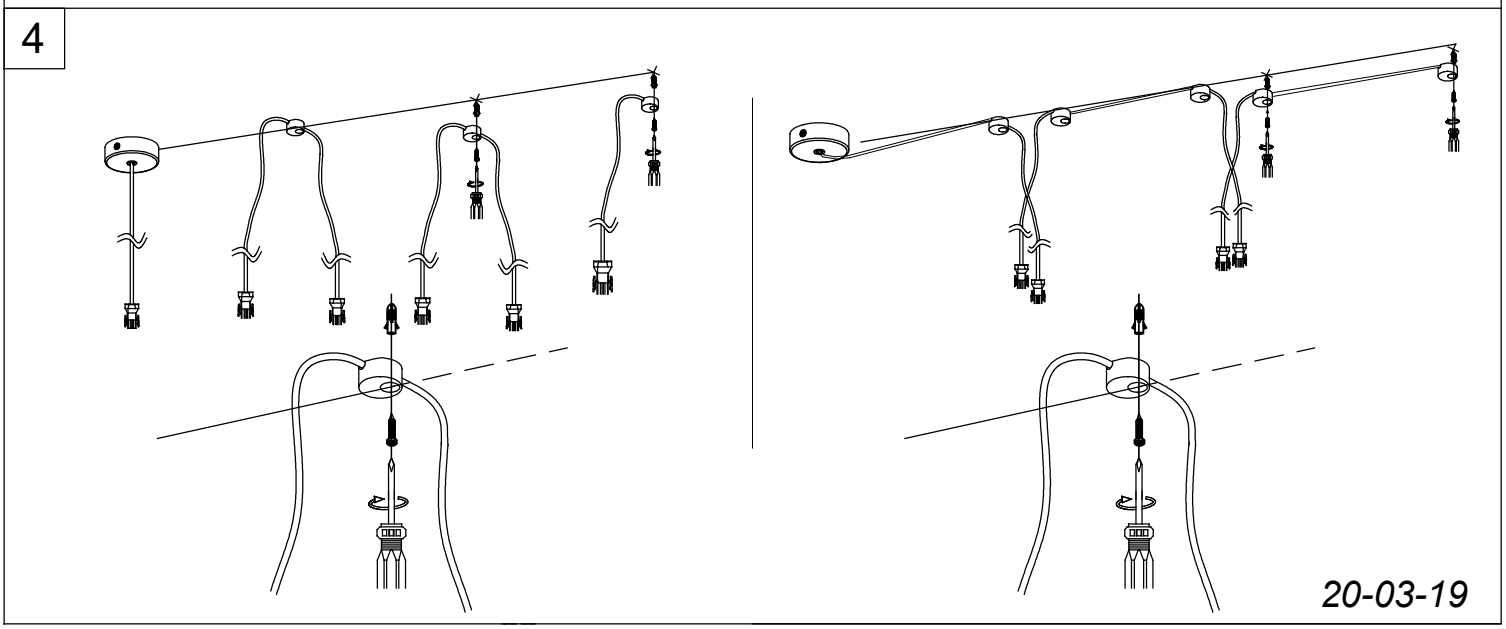

20-03-19

LEDS C4

ATTIC / 00-7396; 7397; 7400; 7401; 7404; 7405

5

code: 71-7388

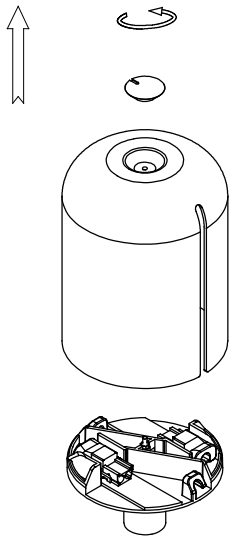

code: 71-7389

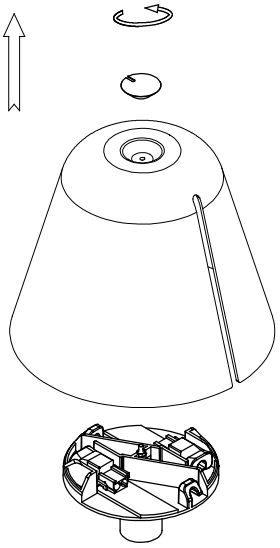

6

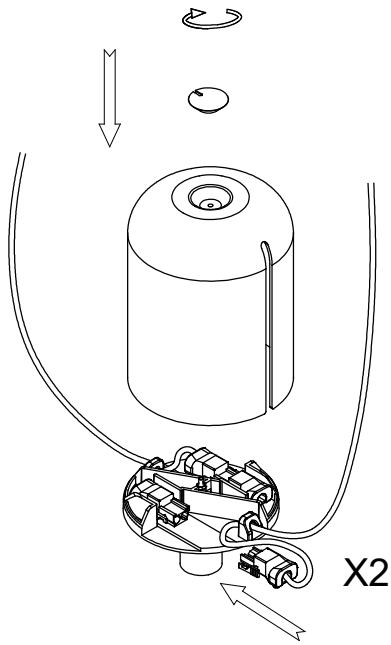

7

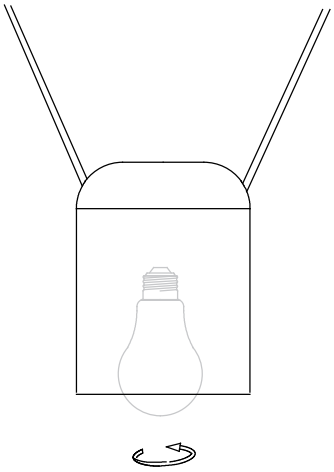

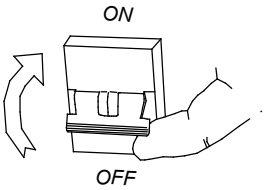

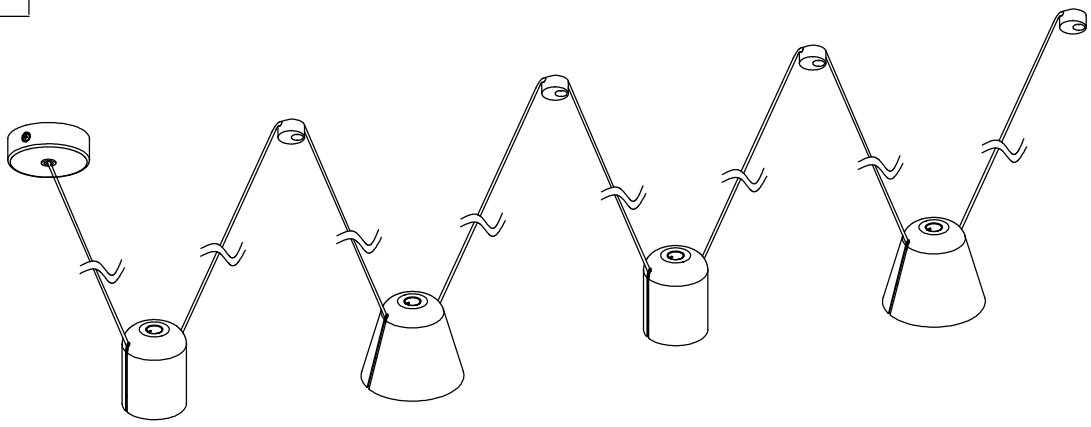

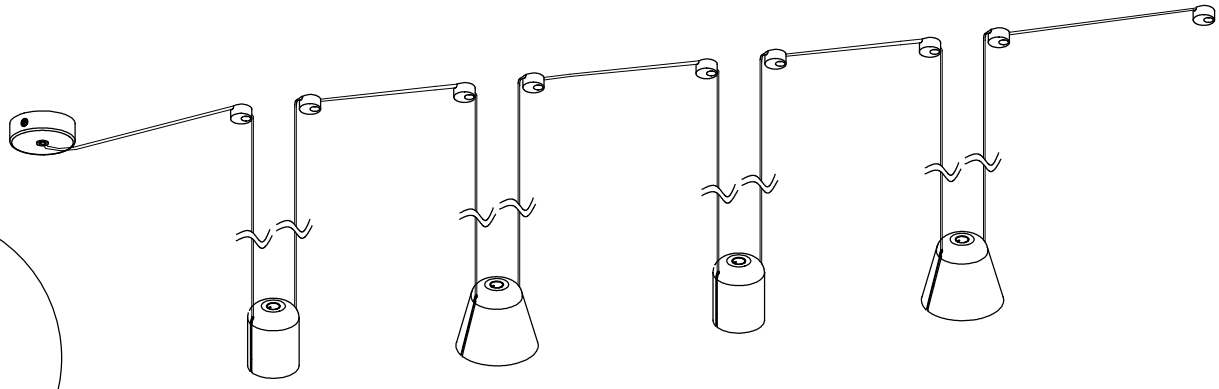

20-03-19